MANISCOPIC

MT 1440

- Maximum lifting height: 13.53 m
- Capacity: 4000 kg
- Maximum forward reach: 9.38 m
- Hydraulic stabilizers
- Frame levelling: ± 9°
- Torque convertor

MANITOU

MT 1440

Lifting capacity.....4000 kg
at 500 mm from forks heels.
Tipping load at maximum reach
with stabilizers.....1950 kg
Tear out force with bucket
to ISO 8313 .....8000 daN

Lifting height .....13.53 m
Times: unladen / loaded (in s)
Lifting 15.5/15
Lowering.....11.5/11.1
Extension boom.....16.4/16.4
Retraction boom 11.9/11.8
Crowd 4
Dump.....4

Tyres.....400/80-24

Forks (mm)
Length 1200
Width x thickness.....125 x 50
Maximum distance between forks 1040
Carriage rotation .....126°

Multidisc brakes - hydraulically assisted on both axles

PERKINS Engine
Type 1104D-44TA
Capacity .....4 cylinders - 4400 cm³
Power:
(ISO/TR 14396) ....74.5 kW/101 HP at 2200 rpm
Maximum torque.....400 Nm at 1400 rpm
Direct injection
Water cooling

Transmission .....torque convertor
Electro-hydraulic reversing shift
4 speeds forward and reverse
Maximum travel speed (kph) 25

Hydraulics
Pump.....gear type
pressure/capacity.....270 bar/170 l/min

Capacities
Cooling system .....20 l.
Engine oil .....10.9 l.
Hydraulic oil.....175 l.
Transmission oil .....23 l.
Fuel tank.....140 l.

Weight unladen .....11115 kg
Overall width.....2.35 m
Overall height.....2.45 m
Turning radius (outside wheels) .....3.98 m
Overall Length .....6.13 m
Ground clearance.....0.38 m
Drawbar pull .....8250 daN

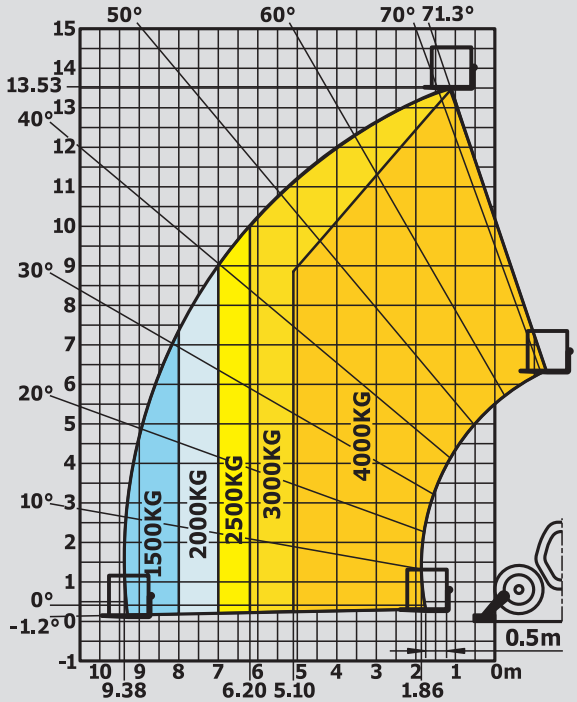

Under
EN 1459
annexe B

A	1200
B	3070
C	1905
C1	1790
D	6135
D1	6020
D2	4872
E	7335
F	1960
F1	1960
G	384
G1	367
G2	380
G3	355
H	9°
H1	9°
I	1160
J	892
K	1040
L	50
N	1855
O	125
P2	34
P3	33
R	3779
S	8615
T	4183
U1	2452
U2	2640
V	5468
V1	1285
V2	3975
W	2351
W1	3793
W2	1134
W3	2422
Y	12
Z	114

mm

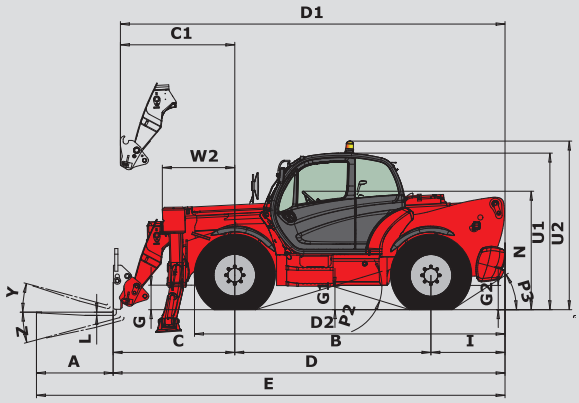

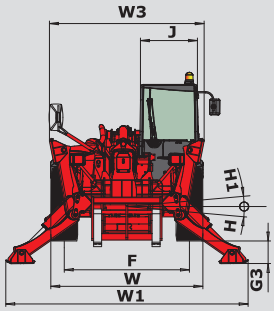

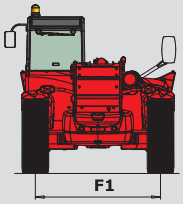

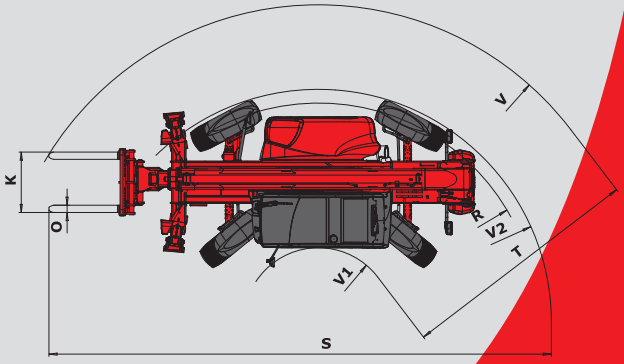

The specifications contained herein shall not bind the manufacturer and are subject to change without notice.
This equipment described in this leaflet may be standard, optional, or unavailable, depending on the versions.
For more details, contact your MANITOU dealer.

MANITOU BF SA
B.P. 249 - 44158 Ancenis Cedex - France
Tel. : 33 2 40 09 10 11 / Export Department Fax : 33 2 40 09 10 97
www.manitou.com

700462EN_A_0711_MT1440